REV	DATE
001	27.06.2025

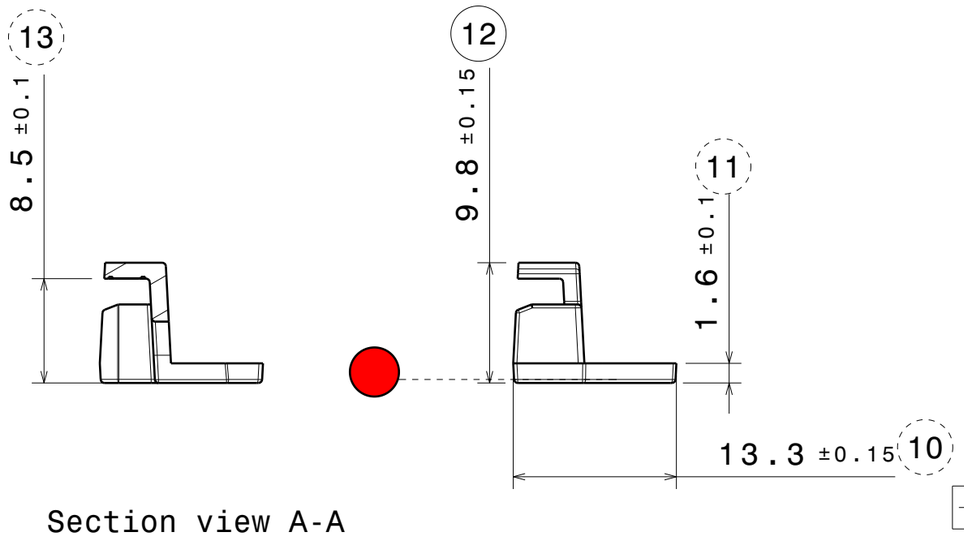

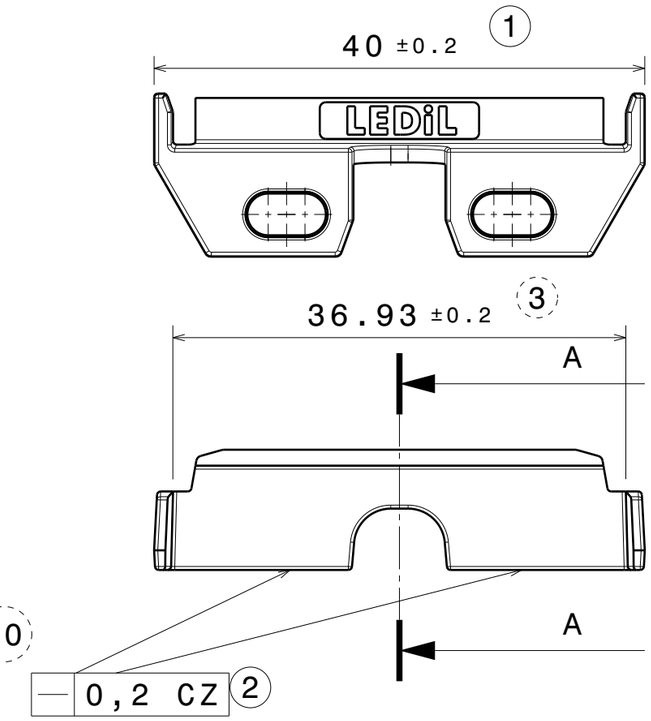

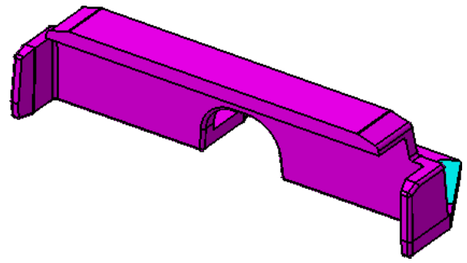

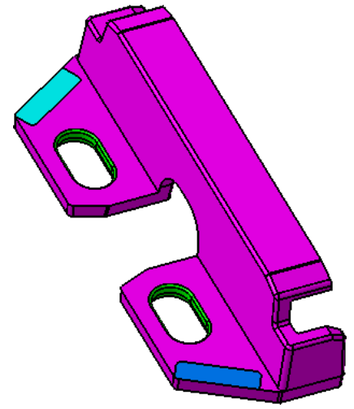

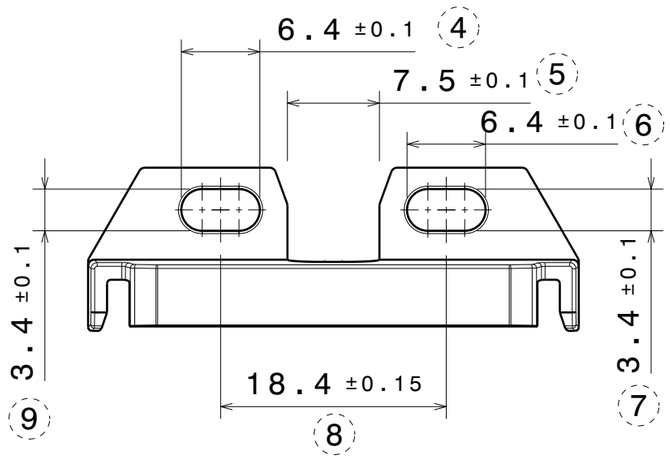

PART	MATERIAL	COLOR / COATING
L20430_LIANNA-2R-END-A _005_MechanicalModel_001		

MECHANICAL DRAWING

PRODUCT LIANNA

LEDiL

Plastic moulding general tolerances according to DIN 16901-130 and applies if not otherwise shown in the drawing. Silicone moulding general tolerances according to ISO 3302-1 Class M3 and applies if not otherwise shown in the drawing.

FIRST ANGLE PROJECTION:

This drawing is the property of LEDiL Oy. It may not be copied or otherwise distributed without prior written permission from LEDiL Oy.

SCALE 2:1 | WEIGHT 1,3 g | A3 | SHEET 1/1

Notes

PCB or heatsink level.
Ensure LED fitting from a product specific 3D model available from www.ledil.com
For more details about installation please see LEDiL Installation Guide on www.ledil.com